CITY OF EAGLE

WATER SUPPLEMENTAL STANDARDS
FOR
PUBLIC WORKS CONSTRUCTION

November 15, 2016

City of Eagle
Water Department
P.O. Box 1520
Eagle, ID 83616

CHAPTER 1 GENERAL

The City of Eagle has adopted the current Edition of the Idaho Standards for Public Works Construction (ISPWC). Prior to any public works development or construction, the Owner or the Owner's representative shall review the above adopted standards. The City has developed its own construction standards that supplement and supersede the current edition of the ISPWC. These City standards include acceptable materials, construction practices, and other specified requirements which may not be covered under the ISPWC standards or contained in the City Code.

These standards have been made in conjunction with the current ISPWC. The intention of these Construction Standards is not to conflict with the above stated standards, but rather to supplement and specify construction methods, materials, sizes, and practices. If a question arises between the two because of a conflict, then this matter shall be brought to the attention of the City Engineer and the City Water Superintendent. The City of Eagle Water Superintendent is authorized to issue a written waiver prior to the commencement of any work on a case by case basis should he find it necessary to do so.

CHAPTER 2 WATER

1. General:
   All materials, construction, testing, and inspection shall be in accordance with the applicable divisions in the most recent edition of the ISPWC. All proposed developments shall be submitted to the City according to City Ordinance. Water pipe shall be extended to the furthest property boundaries of the development.

2. Fire Flow requirements:
   A. The water distribution system shall provide fire flow requirements which shall be based, as a minimum, on the requirements of the most recently adopted edition of the International Fire Code and the proposed building site, configuration, size and type. The Eagle Fire Protection District shall establish the fire flow requirements for the development.

   B. The City Engineer and authorized City of Eagle water personnel shall review the existing water system capacities as they relate to the proposed layout of the development and shall make recommendations as to the minimum water main pipe diameter, and the additional water supply and/or storage requirements to be required from the developer.

3. Fire Hydrants:
   A. Spacing
      i. Hydrant spacing shall be at no more than 500 feet, except for dead-end streets which shall have a spacing of no more than 400 feet.
      ii. Hydrant spacing shall be measured along the road frontage.
      iii. Hydrant Spacing shall be reviewed and approved by the authorized City of Eagle water personnel during the standard review process required by City Ordinance.
      iv. Hydrant spacing shall also be reviewed and approved by the appropriate Fire District.
      v. Hydrants shall be located one to three feet (1' to 3') behind back of attached sidewalk or one to three feet (1' to 3') behind back of curb when sidewalk is detached.

   B. Materials
      i. Fire Hydrants shall be 250 psi ANSI/AWWA C-502 dry barrel, open left from either Mueller Centurion, Clow Medallion or AFC Darling B84. All hydrants shall be fusion bonded, epoxy coated or epoxy painted in fire hydrant red. The AFC Pacer may be allowed with conditional permission from the City of Eagle Water Department.
      ii. All fire hydrants shall have a Storz Coupler on the steamer port. Storz couplers shall be manufactured by Red Head Brass, Angus Fire or Harrington NPHA.
      iii. Fire Hydrants shall be installed in accordance with the current edition of the ISPWC Section 403 and as detailed in SD-W1. The hydrant shoe shall be wrapped in filter fabric to protect the weep holes and the drain rock/chips separated from the dirt backfill with a layer of filter fabric.

C. Installation
   i. Hydrant valves shall be flange by MJ and shall be installed at the hydrant tee or tapping saddle.
   ii. All water mains installed on cul-de-sacs or similar dead-end streets shall have a hydrant located at the end of the water line.

4. <u>Water Pipe, Fittings and Valves:</u>
   A. Materials. All water pipe, fittings, and valves shall be in accordance with the current edition of the ISPWC Section 401.2 and 402.2. Water pipe, fittings and valves shall be the following or City-approved equivalent.
      i. Water Pipe:
         a. Class 52 cement-lined ductile iron pipe meeting ANSI/AWWA C151 for diameters of 6" to 64";
         b. AWWA C900 PVC Class 150 DR 18 pipe or AWWA C909 PVC for diameters up to 12";
         c. AWWA C905 PVC 165 psi DR 25 pipe or AWWA C909 PVC for diameters larger than 12";
         d. Optional with authorized City of Eagle water personnel approval, ASTM D 3350, HDPE PE4710 / DR11 for sizes over 12”.
      ii. Fittings:
         a. Ductile Iron flanged fitting ANSI/AWWA C153;
         b. When authorized by City of Eagle water personnel, the HDPE pipe shall have thermal fusion welded fittings.
      iii. Valves:
         a. Ductile Iron resilient seat gate valves ANSI/AWWA C509 or C515;
         b. Tracer wire at all valves shall be located on the outside of the valve box and pass between the valve box and the slip top. The wire is not allowed to come into the valve box from the bottom;
         c. Water valves manufactured by Mueller, Clow or AFC. Comparable brands may be considered only with prior written approval from the City water superintendent.

   B. Trench Backfill. Type A backfill according to the specifications set forth in the current edition of the ISPWC.

   C. Pipe Bedding. Class B-2 Bedding system according to the specifications set forth in the current edition of the ISPWC.

   D. Thrust Blocks. Thrust blocks shall be placed in dry conditions and in accordance to the specifications set forth in the current edition of the ISPWC, SD-403.

   E. Testing. Water Mains shall be tested by the Owner prior to permitting such water mains to be open to the distribution system. Authorized City of Eagle water personnel and the Owner’s engineer shall be present during all water main testing. Failure to have City water personnel present is sufficient reason to require a retest. Owner’s engineer shall

provide certification of testing and testing results to City of Eagle water personnel and the City Engineer.

i. Disinfection: Water mains shall be disinfected according to the specifications set forth in the current edition of the ISPWC section 401.3.9 prior to leak and pressure testing.

ii. Pressure Testing: Water mains shall be pressure tested according to the specifications set forth in the current edition of the ISPWC section 401.3.6. Exceptions are as follows:

   a. Test pressure shall be 1.5 times static pressure or 150 psi, whichever is greater;

   b. If pressure during testing drops 5 psi or more, the test is considered to have failed regardless of whether leakage is below allowable or not;

   c. All valve boxes shall be exposed and all valves shall be accessible and fully operational prior to any testing.

iii. Continuity Testing: Contractor shall conduct continuity testing on tracer wires at the time of pressure testing and again at punchlist time in the presence of authorized City personnel.

iv. Trench Compaction Testing: Trench compaction testing shall be performed once every 300 linear feet of water line placed with a minimum of two test locations. Testing and retesting shall be in accordance with the specifications set forth in the current edition of the ISPWC section 306.3.3.B.

F. Location. Water mains shall be designed so a minimal number of non-potable water crossings occur in the construction for developments, and that they generally follow the center line of streets as closely as possible. All water line locations will be approved by authorized City of Eagle water personnel and the City Engineer. Valves that are connected to the City main lines become City property and can only be operated by City water personnel. In cases where water pipe crosses a non-potable water line constructed with water class pipe, the distances between the pipes shall not be closer than 4-inches and shall be separated by the placement of 4-inches of rigid foam board. Lines shall be extended to the furthest property boundary.

G. Size. Water main sizes shall be as follows except when otherwise recommended by the City Engineer for fire flows or other system conditions. Minimum size shall be 8” in diameter unless a larger size is set forth in the Water Master Plan or is deemed necessary by City of Eagle water personnel or the City Engineer.

H. Valve configuration shall be as follows:

i. All crosses and tees shall have valves on all legs.

ii. Hydrant valves shall be installed at the water main tee per SD-W1.

iii. When connecting a new water line to an existing water line that is 10" or greater, a valve at all branches (except at a hydrant) is required unless specifically approved by the City of Eagle Water Department.

I. Cover. Water mains shall have a minimum cover of 48” and a maximum cover of 60". Cover greater than 60" may be allowed where obstructions occur, but must be approved by the City of Eagle Water Department.

J. Dead-end Water Mains:

i. Dead-end mains shall be avoided whenever possible.

ii. Dead-end water mains shall only be permitted when phased development is approved and water service is scheduled to continue along the water main run, or on approved cul-de-sacs.

iii. All water mains installed on cul-de-sacs or similar dead-end streets shall have a hydrant located at the end of the water line.

iv. All water main stubs and dead-end mains stubbed for future development shall have a 2 inch blow-off. All lines larger than 12” shall have a 4” blow-off.

K. Water Main Stubs. No water services shall be installed on water main stubs to future developments unless specifically approved by the City of Eagle Water Department.

L. Water Mains shall be extended to the furthest property boundary.

M. Water Valves installed at tees or crosses shall be flange by MJ.

N. Sample stations are required to be installed in every phase of a new development. The location will be approved by authorized City of Eagle water personnel at the time of plan review. Sample stations shall be Kupferle #88 Sampling Station, or City-approved equivalent, as detailed in SD-W5.

O. At all times, when laying pipe is not in progress, open-end pipe shall be closed by a watertight plug.

P. Contractors working in the City are not to open, close, or tamper with any valve. The contractor shall notify the City Water Department when a valve needs to be opened or closed.

5. <u>Water Services:</u>

A. Service Lines. Service lines shall be minimum 1” diameter and a minimum200 psi PE pipe with tracer wire from water meter to water main.

B. Service Line Saddle. Service line saddles for water mains shall be stainless steel, Mueller or City-approved equivalent. Saddles are required at all main line connections. Saddles installed on 12" or greater pipe shall have a stainless steel double strap.

C. Corporation Stop. Corporation stops shall be Ford FB-1101, Mueller or City-approved equivalent. Corporation stops are required at all main line connections.

D. Meter Setter. Meter setters shall be Ford or Mueller as detailed by SD-W2 and SD-W3 and have a dual check valve. Meter setter copper tubing shall extend a minimum 18 inches from the outside of the meter vault on the customer side of the meter vault. Setter shall be provided with pack joint fittings suitable for connection to PE service pipe. Meter setter shall be centered in meter vault. Centerline of the meter setter shall be not less than 18 inches and not more than 21 inches below finished grade.

E. Meter Vaults. Meter vaults shall be made of 20" Dia X 42" deep poly meter box by Raven, or equivalent, for ¾ inch and 1" services. All meter vaults for 1½" to 2" services shall be installed as detailed by SD-W3. Meter vault lids shall be as detailed by SD-W2 and SD-W3.

F. Meter vaults shall be located on the opposite side of a building lot from the location of mailboxes.

G. Meters. All water meters shall be installed by the City of Eagle Water Department. City of Eagle Water Department shall be contacted for sizing and associated fees.

H. Location. The water meter vaults shall be located within the public utility easement adjacent to the right-of-way. The center of the water meter vaults shall be located approximately two feet (2') from the back of sidewalk and two feet (2') from the side lot line unless otherwise approved by authorized City of Eagle water personnel or the City Engineer.

I. The developer shall provide and install all materials for water services except the water meter. The City shall provide the water meter.

J. The City of Eagle does not allow dual connections between potable and any non-potable water system or source. If a separate pressurized irrigation system is not required pursuant to Eagle City Code, landscaping connections are allowed with an approved reduced pressure backflow assembly only. Plumbing permits shall be obtained through the City of Eagle Building Department prior to installation and inspected by authorized City of Eagle water personnel.

6. <u>Construction:</u>

A. All public works construction shall be performed by a licensed plumber and/or licensed public works contractor.

B. No public works water construction shall begin without the authorization of City of Eagle authorized water personnel.

CHAPTER 3 PROJECT INSPECTIONS / CONSTRUCTION

1. General:
   A. Prior to commencement of construction, the Owner shall hold a pre-construction meeting with ACHD and authorized City of Eagle water personnel.

   B. Prior to commencement of construction, the Owner shall provide to authorized City of Eagle water personnel material submittals for the associated portion(s) of the proposed improvements. The Owner shall not begin construction until the Owner receives written approval from the City for all of the submittals. City approval shall not be unreasonably withheld.

2. On Site Inspector(s):
   A. Project inspection shall be conducted on a daily basis under the auspices and control of the Owner's Idaho-licensed professional Engineer.

   B. Prior to any new construction or repair of existing water facilities the Owner shall provide to the City of Eagle Water Department, in writing, the inspector's name, a statement of the inspector's qualifications, office location, phone number, and 24-hour emergency telephone numbers.

   C. No water construction shall take place without first notifying a City inspector.

   D. Periodic observation may be conducted by authorized City of Eagle water personnel and/or the City Engineer.

   E. Project Log. The on-site project inspector shall keep a written inspection and photographic log detailing the daily activities of the project. The log shall, at a minimum, consist of:
      i. Written: A written description of the daily activities including weather conditions, trench conditions, personnel on site, equipment on site, equipment in use, materials used and construction practices employed.
      ii. Photographic: Photographs of all connections to existing City utilities, pipe intersections, connections, and valves identified by stations represented on the plans. The Owner shall provide the City with photographs in the hard copy log and in digital format.

3. Project Completion Packet:
   A. The project completion packet consists of the items below. At the completion of construction, before the release of any security posted with the City, and before the City issues occupancy permits, the City shall receive:
      i. A copy of the inspection log.
      ii. A copy of the digital photographs.
      iii. Three (3) copies of readable As-Built drawings in hard copy, one digital copy in AutoCAD format and one digital copy in pdf format.
      iv. The digital As-Built drawings shall include, as a minimum, GPS coordinate locations

of all installed water valves, fire hydrants, and water services. Said plan shall show the location of the installed water, sanitary sewer, and storm sewer lines.

v. All test results shall be certified to the City of Eagle Water Department by the developer's Idaho-licensed professional Engineer.

vi. All tests shall be completed and added to the completion packet including water tests, compaction, etc.

4. Inspections:

A. Pre-final Inspection

i. The Owner's Engineer shall schedule with authorized City of Eagle water personnel a Pre-final Inspection and shall give City water personnel at least two (2) City working days advance notice.

ii. The Pre-final inspection shall be performed by the Owner's Engineer and observed by City water personnel.

iii. Within five (5) working days of the Pre-final Inspection, City water personnel will prepare a punch list of deficiencies that were observed during the Pre-final Inspection.

iv. Based on the assessment by City water personnel, the Owner may secure an item or items by surety in accordance with City Code so that the Owner may proceed with the development plan.

v. Punch list items shall be completed to the satisfaction of City water personnel prior to the release of any portion of the security.

B. Final Inspection

i. Prior to Final Inspection by authorized City of Eagle water personnel, the Owner's Engineer shall walk through the project and compile a list of punch list items that have not been completed.

ii. Prior to City water personnel participating in a Final Inspection, all deficient items on the punch list shall be substantially completed.

iii. When all items listed on the City's punch list are completed to the satisfaction of the Owner's Engineer, the Owner's Engineer shall schedule a Final Inspection with City water personnel and shall provide at least two (2) City working days advance notice.

iv. If during the Final Inspection City water personnel observes items that still do not meet City standards, the Owner's Engineer shall insure that those items are addressed and shall repeat the Final Inspection process until all items have been completed to the satisfaction of the City water personnel.

5. Substantial Completion:

A. When all items on the City's punch list have been completed to the satisfaction of authorized City of Eagle water personnel, the Owner's Engineer shall provide the City water department with detailed and accurate, stamped and signed as-built drawings of the project in both hard copy and electronic formats.

B. When all items contained on the City's punch list are completed and authorized City of Eagle water personnel have received the as-built drawings, and the project is substantially complete, authorized City of Eagle water personnel will issue a Certificate of Completion and the warranty period will start. The warranty period shall extend 12 months from the

date of the Certificate of Completion. A copy of a Certificate of Completion is included in the Appendix.

CHAPTER 4 MISCELLANEOUS INFORMATION

1. Construction of New Wells
   A. All new wells shall be installed with chlorine treatment as a minimum. Eye wash and chemical showers shall be installed to code. Further detailed plans for new wells will be coordinated as such becomes necessary.

Chapter 5 Development Review Policy

Preliminary Plat

1. After the preliminary plat is submitted to the Planning & Zoning Department, both the City Water Department and City Engineer will be provided a copy for concurrent review.
2. The City Water Department will provide comments to the City Engineer for inclusion in the review letter.
3. Developer shall review Resolution 08-09 regarding City requirements for eligible reimbursements on any required over-sizes. All eligible costs must be approved in writing by the City before the costs are incurred.
4. After incorporating the City Water Department comments into the review letter, the City Engineer will provide a *DRAFT* copy of the letter for review and approval by the City Water Department prior to sending to the development engineer. This will ensure that all City comments have been correctly incorporated into the response letter and will provide the City Water Department the opportunity to concur with any comments generated by the City Engineer.
5. Following the City Water Department approval, the City Engineer will issue the review letter to the development engineer and applicant.

Final Plat/Construction Plans

1. After the final plat and construction plans are submitted to the Planning & Zoning Department, both the City Water Department and City Engineer will be provided a copy for concurrent review.
2. The City Water Department will provide comments to the City Engineer for inclusion in the review letter.
3. After incorporating the City Water Department comments into the review letter, the City Engineer will provide a *DRAFT* copy of the letter for review and approval by the City Water Department prior to sending to the development engineer. This will ensure that all City comments have been correctly incorporated into the response letter and will provide the City Water Department the opportunity to concur with any comments generated by the City Engineer.

4. After the City Water Department approval, the City Engineer will issue the review letter to the development engineer and applicant.
6. After submittal of final construction plans by the developer's engineer. The City Engineer will complete the QLPE review packet (as required by DEQ) and provide a copy to the City Water Department with comments/recommendations.
7. The City Water Department will approve the final construction plans by stamping and signing the plan sheets and submitting them to DEQ.

Construction

1. The preconstruction meeting shall be scheduled with the City Water Department. Typically these meetings have been attended by the City Water Department at a joint preconstruction meeting held at ACHD.
2. The developer shall provide the City Water Department with construction submittals including material lists vs actual product delivery. Any deviation from the provided lists shall be approved in writing by authorized City of Eagle water personnel before construction may begin. All submittals shall be approved by the City Water Department.
3. All requests and questions from the development engineer will be directed through the City Water Department. The City Water Department will determine to either answer the request/questions directly or forward to the City Engineer for comments and recommendations. Comments and recommendations will be forwarded to the City Water Department for their response to the development engineer.
4. The City Water Department will inspect on-going construction at its own discretion, above and beyond the project engineer's inspection. Any construction that is deemed non-compliant may be red-tagged by the City Water Department inspector. All specified work shall cease upon receipt of a red tag or stop work order. Any contractor who continues work after receiving a red tag or stop work order shall be subject to City Code Enforcement with potential fines and penalties. After correction of the issue is completed, a new inspection by City Water Personnel will be conducted and a written authorization to resume shall be issued.
5. The City Water Department will conduct a project walkover and generate a punchlist.
6. Upon receiving the required project completion items including test results, photos, inspection logs, record drawings and certification from the development engineer, the City Water Department will issue a Certificate of Completion and obtain the necessary signatures.

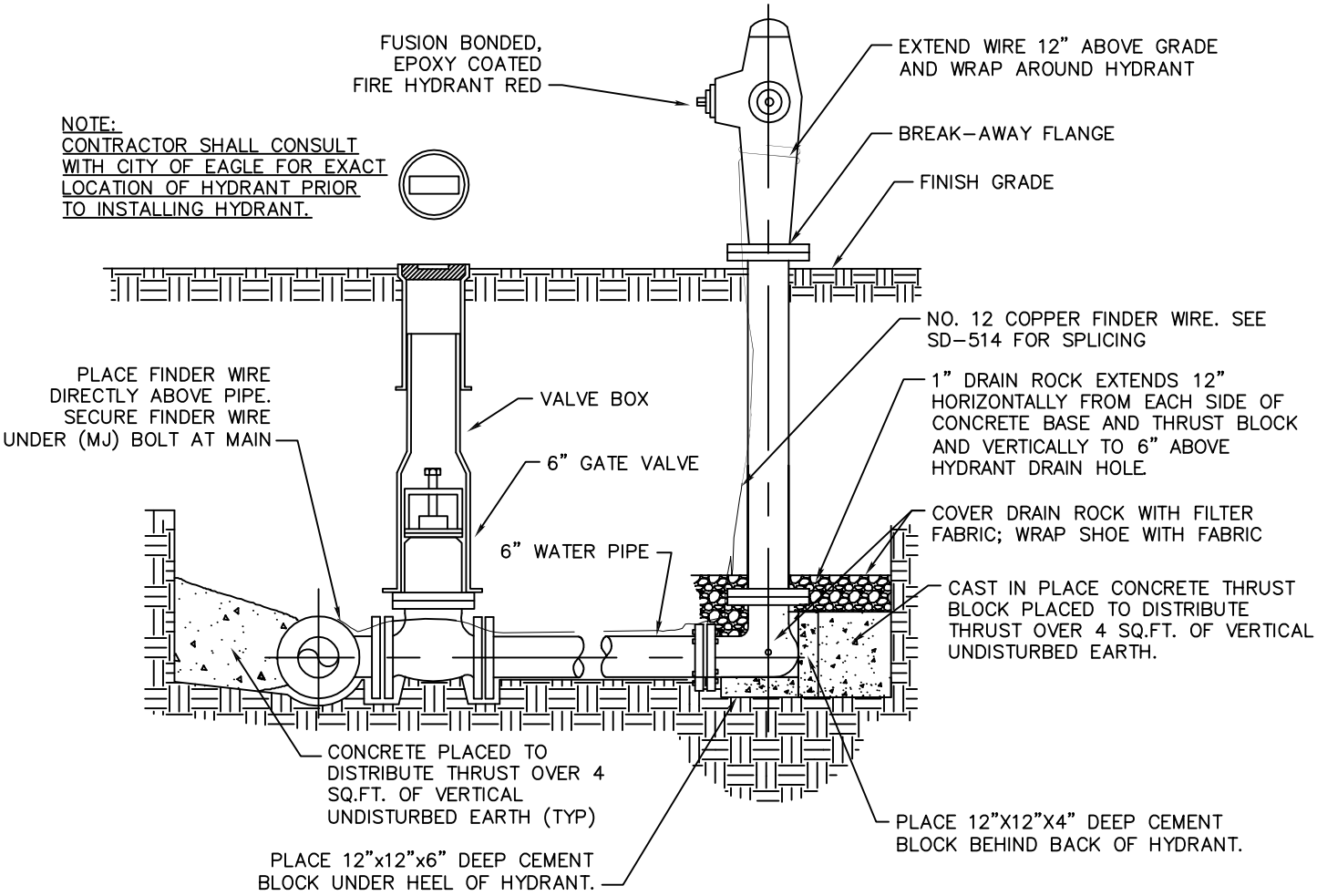

FIRE HYDRANT DETAIL

NTS

2016

CITY OF EAGLE WATER DEPARTMENT	FIRE HYDRANT INSTALLATION	STANDARD DRAWING NO. SD-W1

G:\CLIENTS\STANDARDS\EG\SD-W1

NOTES:

(A) ALL PRODUCTS AS LISTED OR APPROVED SUBSTITUTIONS.

(B) NO GALVANIZED PIPE OR YELLOW BRASS FITTINGS TO BE USED.

(C) SERVICE PIPE: ULTRA HIGH MOLECULAR WEIGHT POLYETHYLENE PIPE SIDR7 CLASS 200 IN IRON PIPE SIZE (DRISCO PIPE 8600 ULTRA LINE) 1". END BEVEL WITH MUELLER TOOL ONLY.

(D) SADDLE COUPLINGS: USED FOR CONNECTION OF ALL SERVICE LINES TO PVC MAIN. SERVICE SADDLES: EPOXY COATED STEEL WITH STAINLESS STEEL BAND AND MUELLER THREADS, TYPE CC.

(E) NO SERVICE CONNECTIONS WITHIN ONE FOOT OF THE PIPE ENDS. STAGGER MULTIPLE CONNECTIONS MADE ON THE SAME JOINT OF PIPE ALONG CIRCUMFERENCE AND SEPARATED BY A MINIMUM OF ONE FOOT.

(F) CENTER METER BOXES LOCATED IN CONCRETE DRIVEWAYS IN A 4'X 4' SQUARE OF CONCRETE, SEPARATED FROM THE REST OF THE DRIVEWAY CONCRETE BY EXPANSION JOINT MATERIAL. USE 30" TILE WITH CONCRETE GRADE RING, STANDARD MANHOLE RING AND TRAFFIC-RATED LID MARKED "WATER".

(G) SET ELEVATION OF METER LID PER LOCAL REQUIREMENTS.

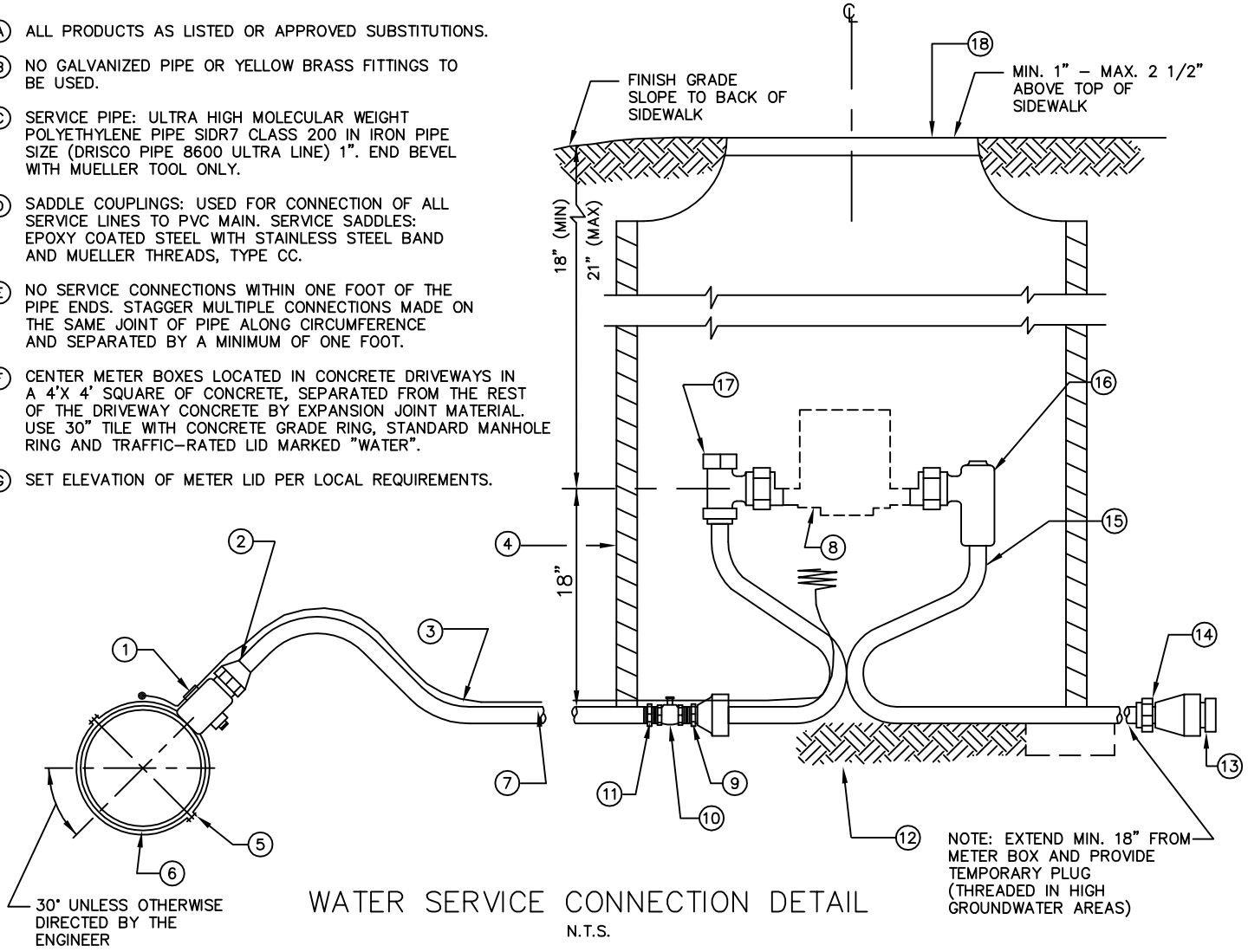

WATER SERVICE CONNECTION DETAIL

N.T.S.

LEGEND

1. 1" FORD FB-1101 OR MUELLER BALL CORPORATION STOP.
2. MUELLER H-15072.
3. NO. 12 COPPER FINDER WIRE. SEE ISPWC SD-514 FOR SPLICING
4. 20" DIA. X 42" DEEP METER BOX (NOTCH FOR SERVICE LINES).
5. STAINLESS STEEL SADDLE.
6. WATER MAIN.
7. 1" SERVICE LINE (TYP.). NO SPLICING IS ALLOWED.
8. FUTURE 3/4" METER INSTALLED BY WATER PURVEYOR.
9. MALE SWIVEL END.
10. FULL OPENING 3/4" OR 1" MUELLER 300 BALL OR FORD B-11333 BALL VALVE.
11. CURB STOP ADAPTER (FORD C-86 OR MUELLER H-15426 "GRIP JOINT").
12. FIRM UNDISTURBED EARTH. (SET METER BOX ON 2"X 22" DIAMETER PRECAST CONCRETE BLOCK IF OVER-EXCAVATION OCCURS).
13. PROVIDE TEMPORARY PLUG (THREADED IN HIGH WATER AREAS).
14. DOUBLE PURPOSE COUPLING.
15. FORD VHH-92-18" YOKE WITH MALE CONNECTION AND EXTENDED END OR APPROVED EQUAL.
16. FORD CARTRIDGE DUAL CHECK VALVE (VERTICAL).
17. FORD BALL VALVE (92,93,94 SERIES OR MUELLER B24101-142) 3/4" COPPERSETTER WITH PADLOCK WINGS AND EXTENDED END ON EACH.
18. FORD TYPE X SINGLE LID COVERS NO. X43, 13 1/2" OPENING-1 1/32" PENTAGONAL NUT. LID SHALL BE TRAFFIC-RATED IF METER WILL BE LOCATED IN AREA SUBJECT OF VEHICULAR TRAFFIC.

2016

CITY OF EAGLE WATER DEPARTMENT	WATER SERVICE CONNECTION (1")	STANDARD DRAWING NO. SD-W2

G:\CLIENTS\STANDARDS\EG\SD-W2

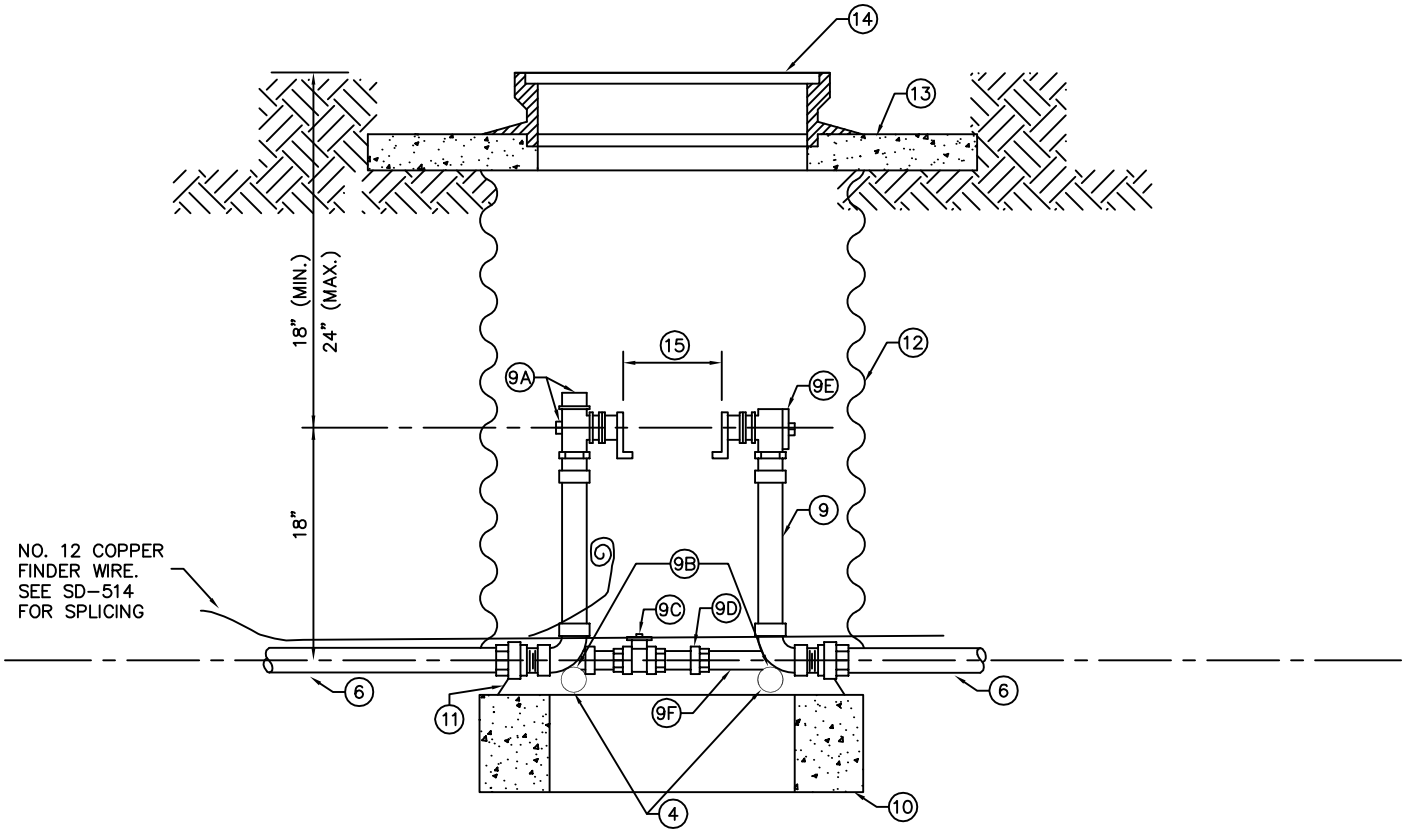

WATER SERVICE CONNECTION DETAIL

NTS

LEGEND

1. WATER MAIN PER SECTION-401.
2. SADDLE WITH IP THREAD AND STAINLESS STEEL STRAP.
3. BALLCORP TYPE FB400 INLET AWWA TAPER IP X PACK JOINT W/S.S. INSERT {FORD 1 1/2" (FB1001-6), 2" (FB1001-7)}.
4. 1" DIA. GALVANIZED BRACE PIPE (APPROX. 18" LONG), 2 REQUIRED.
5. N/A.
6. SERVICE LINE: 1 1/2" OR 2" POLYETHYLENE PIPE WITH PACK JOINT BRASS FITTINGS AND STAINLESS STEEL INSERTS.
7. N/A
8. N/A
9. METER SETTER W/ THE FOLLOWING FACTORY ASSEMBLED ITEMS:
   A. ANGLE BALL VALVE WITH PADLOCK WING.
   B. BRACE PIPE EYELETS STANDARD.
   C. BALL VALVE WITH PADLOCK WING ON BY-PASS.
   D. BY-PASS PACK JOINT.
   E. ANGLE CHECK VALVE.
   F. RED BRASS BY-PASS.
10. 2" X 35" O.D. CONCRETE GRADE RING (UNDER YOKE).
11. NOTCH CMP FOR OFFSET ON GRADE RING.
12. 30" DIA. X 44" MIN. LENGTH CMP. (NO FIELD NOTCHING.)
13. 4" X 35" O.D. CONCRETE GRADE RING.
14. STANDARD 24" DIAMETER MANHOLE RING AND "WATER" COVER. LIDS SHALL BE TRAFFIC-RATED IF METER WILL BE LOCATED IN AREA SUBJECT TO VEHICULAR TRAFFIC. LIDS SHALL BE SPECIALLY CONSTRUCTED WITH PRECAST 1-⅞ INCH HOLES FOR REMOTE "TOUCH PAD" ELECTRONIC METER READING MODULES. LIDS WITH HOLES THAT HAVE BEEN FIELD-DRILLED WILL NOT BE ACCEPTED.
15. 1-1/2" METER = 13-1/4" WITH GASKETS, 2" METER = 17-1/4" WITH GASKETS.

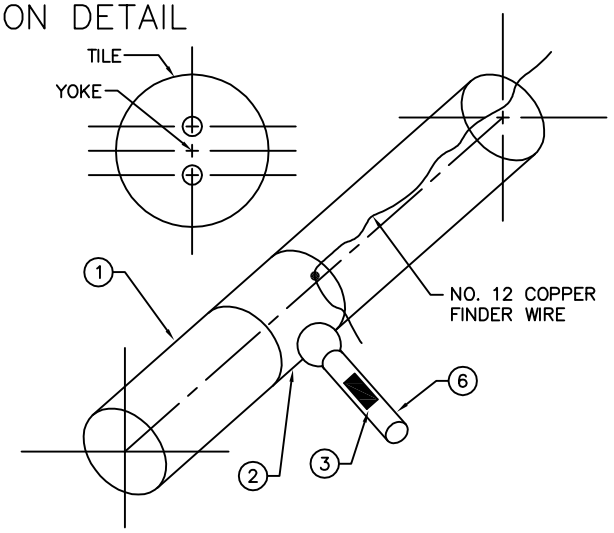

TAP CONNECTION

NTS

NOTES:

A. ALL PRODUCTS AS NOTED OR APPROVED SUBSTITUTION.

B. THE DIAMETER (1-1/2" OR 2") OF EACH APPURTENANCE SHOWN HEREON IS THE SAME AS THE METER SIZE.

C. NO BY-PASS ALLOWED ON METER SETTERS FOR LANDSCAPE OR PRESSURIZED IRRIGATION SYSTEM.

D. NO GALVANIZED PIPE OR YELLOW BRASS FITTINGS.

E. NO TAPS WITHIN ONE FOOT OF THE PIPE ENDS.

2016

CITY OF EAGLE WATER DEPARTMENT	WATER SERVICE CONNECTION (1-1/2" TO 2")	STANDARD DRAWING NO. SD-W3

G:\CLIENTS\STANDARDS\EG\SD-W3

NOTES:

1. ALL PRODUCTS AS LISTED OR APPROVED SUBSTITUTES.
2. NO GALVANIZED PIPE OR YELLOW BRASS FITTINGS TO BE USED.
3. SERVICE PIPE: ULTRA HIGH MOLECULAR WEIGHT POLYETHYLENE PIPE FOR SIDR7, CLASS 200 IN IRON PIPE SIZE (DRISCO PIPE 8600 ULTRA LINE) 1". END BEVEL WITH MUELLER TOOL ONLY.
4. SADDLE COUPLINGS: USED FOR CONNECTION OF ALL SERVICE LINES TO PVC MAIN. SERVICE SADDLES: EPOXY COATED STEEL WITH STAINLESS STEEL BAND AND MUELLER THREADS, TYPE CC.
5. NO SERVICE CONNECTIONS WITHIN ONE FOOT OF THE PIPE ENDS. STAGGER MULTIPLE CONNECTIONS MADE ON THE SAME JOINT OF PIPE ALONG CIRCUMFERENCE AND SEPARATED BY A MINIMUM OF ONE FOOT.
6. CENTER METER BOXES LOCATED IN CONCRETE DRIVEWAYS IN A 4'x4' SQUARE OF CONCRETE, SEPARATED FROM THE REST OF THE DRIVEWAY CONCRETE BY EXPANSION JOINT MATERIAL. USE 30" TILE WITH CONCRETE GRADE RING, STANDARD MANHOLE RING AND TRAFFICE RATED LID MARKED "WATER".
7. SET ELEVATION OF METER LID PER LOCAL REQUIREMENTS.

DOUBLE WATER METER BRANCH FITTING AND LOCATION

-NTS-

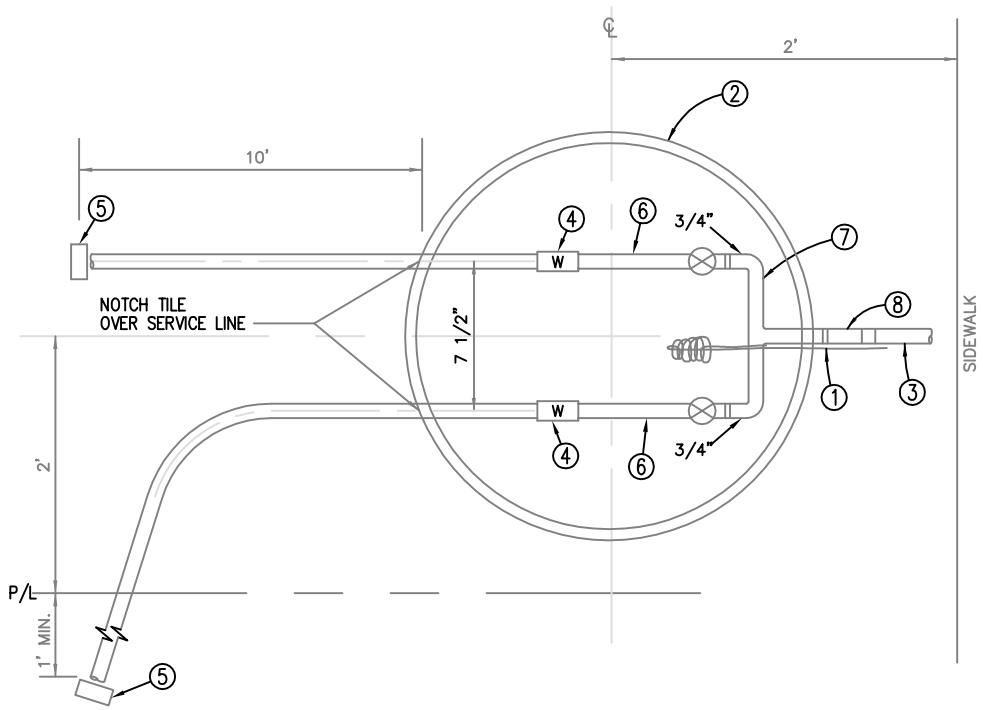

SEE SD-W2 & SD-W3 DETAIL FOR ADDITIONAL INFORMATION

KEYNOTE LIST

1. NO. 12 COPPER FINDER WIRE. SEE ISPWC SD-514 FOR SPLICING.
2. 20"ø X 42" DEEP (METER BOX (NOTCH FOR SERVICE LINES).
3. 1" SERVICE LINE (TYP.) (NO SPLICING IS ALLOWED)
4. FUTURE ¾" METER INSTALLED BY WATER PURVEYOR.
5. PROVIDE TEMPORARY PLUG (THREADED IN HIGH GROUND WATER AREAS) AND INSTALL SERVICE MARKER.
6. FORD VHH-92-18" YOKE WITH MALE CONNECTION AND EXTENDED END OR APPROVED EQUAL.
7. BRANCH FITTING (FORD U68-43 OR MUELLER H15364).
8. 1" FEMALE x I.P. "GRIP JOINT" FEMALE ADAPTOR (MUELLER H-1545)

2016

CITY OF EAGLE WATER DEPARTMENT	DOUBLE WATER SERVICE	STANDARD DRAWING NO. SD-W4

G:\CLIENTS\STANDARDS\EG\SD-W4

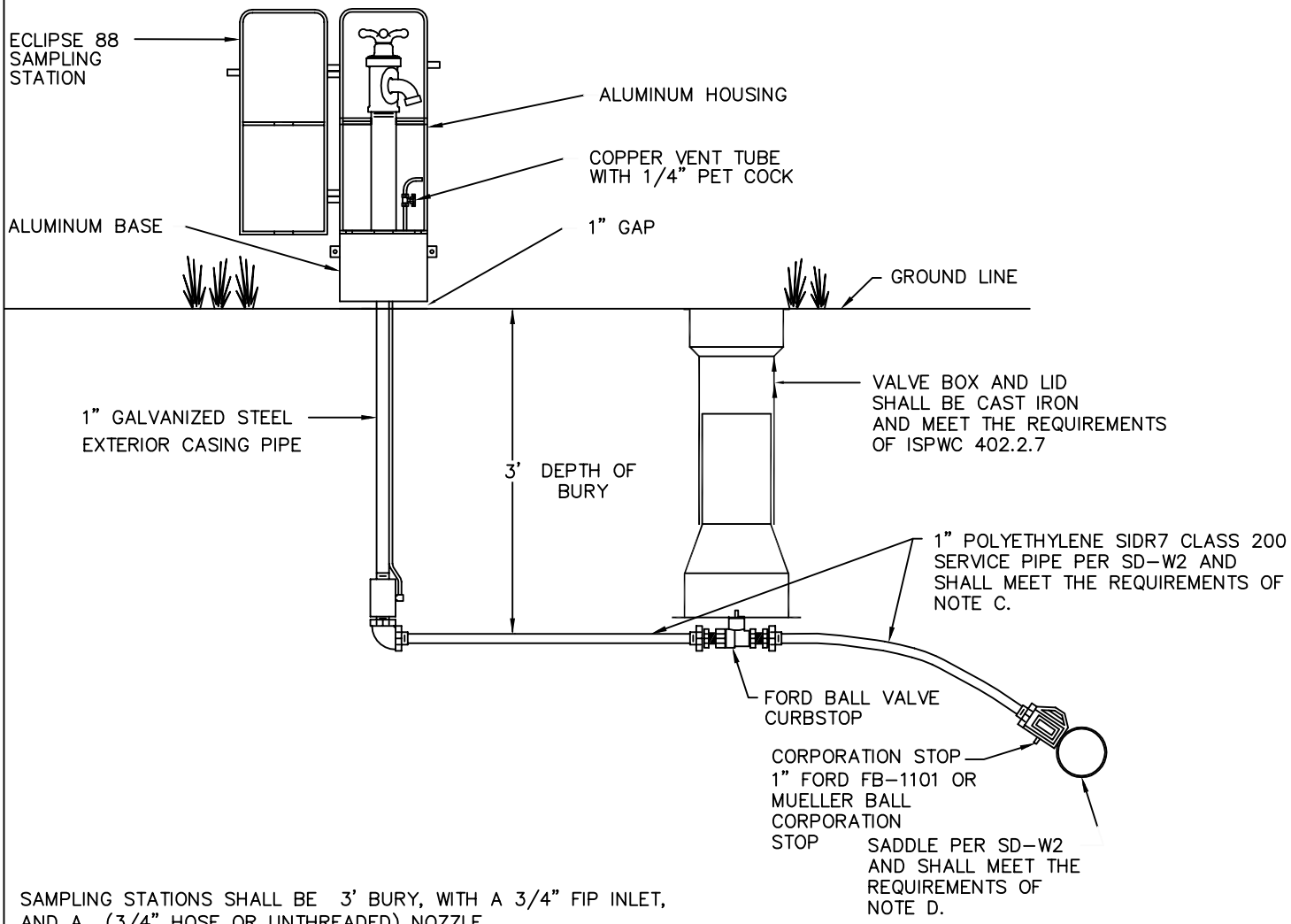

SAMPLING STATIONS SHALL BE 3' BURY, WITH A 3/4" FIP INLET, AND A (3/4" HOSE OR UNTHREADED) NOZZLE.

ALL STATIONS SHALL BE ENCLOSED IN A LOCKABLE, NONREMOVABLE, ALUMINUM-CAST HOUSING.

WHEN OPENED, THE STATION SHALL REQUIRE NO KEY FOR OPERATION, AND THE WATER WILL FLOW IN AN ALL BRASS WATERWAY.

ALL WORKING PARTS WILL ALSO BE OF BRASS AND BE REMOVABLE FROM ABOVE GROUND WITH NO DIGGING. EXTERIOR PIPING SHALL BE BRASS OR GALVANIZED.

A COPPER VENT TUBE WILL ENABLE EACH STATION TO BE PUMPED FREE OF STANDING WATER TO PREVENT FREEZING AND TO MINIMIZE BACTERIA GROWTH.

ECLIPSE NO. #88 SAMPLING STATION SHALL BE MANUFACTURED BY KUPFERLE FOUNDRY, ST. LOUIS, MO 63102.

2016

CITY OF EAGLE WATER DEPARTMENT	SAMPLING STATION	STANDARD DRAWING NO. SD-W5

G:\CLIENTS\STANDARDS\EG\SD-W5

Project Inspector Information

Subdivision:_____

Inspector's Name:_____
Office Address:_____
_____
Mailing Address:_____
_____
Phone Number:_____
Alternate Phone Number:_____
Statement of Inspector's Qualifications:_____
_____
_____
_____
_____
_____

City of Eagle Water Supplemental Standards for Public Works Construction:

1. <u>On Site Inspector(s):</u>
   A. Project inspection shall be conducted on a daily basis under the auspices and control of the Owner's Idaho-licensed professional Engineer.
   B. Prior to any new construction or repair of existing water facilities the Owner shall provide to the City of Eagle Water Department, in writing, the inspector's name, a statement of the inspector's qualifications, office location, phone number, and 24-hour emergency telephone numbers.
   C. No water construction shall take place without first notifying a City inspector.
   D. Periodic observation may be conducted by authorized City of Eagle water personnel and/or the City Engineer.
   E. Project Log: The on-site project inspector shall keep a written inspection and photographic log detailing the daily activities of the project. The log shall, at a minimum, consist of:
      i. Written: A written description of the daily activities including weather conditions, trench conditions, personnel on site, equipment on site, equipment in use, materials used and construction practices employed.
      ii. Photographic: Photographs of all connections to existing City utilities, pipe intersections, connections, and valves identified by stations represented on the plans. The Owner shall provide the City with photographs in the hard copy log and in digital format.

Project Completion Checklist

Subdivision:_____

Date of Walk Over: _____
Submittals Received: _____
Date of Punch List: _____

General

- ☐ Project engineer shall submit certification to the City that all improvements have been constructed in accordance to the approved plans and specifications.
- ☐ Record information.
  - ☐ 3 copies of record drawings (stamped and signed by certifying engineer).
  - ☐ Digital copy of record drawings (ACAD format)
    - ☐ GPS coordinates of;
      - Water valves
      - Fire Hydrants
      - Water Services
    - ☐ Location of;
      - Lot Lines
      - Water Lines
      - Sewer Lines
      - Pressure Irrigation Lines
      - Storm System
  - ☐ PDF copy of record drawings
  - ☐ Daily Construction Log
    - Weather
    - Trench Conditions
    - Personnel on site
    - Equipment in use
    - Materials used
    - Construction practices employed
  - ☐ Photo Log
    - ☐ Labeled photographs (include street names, station and date taken in both paper and digital copy):
      - Connections to existing utilities
      - Internal connections
      - Pipe Intersections
      - Valves (prior to backfill)
      - Hydrants (prior to backfill)
  - ☐ Testing Results
    - ☐ Water Quality tests
    - ☐ Pressure tests
    - ☐ Trench Compaction tests
    - ☐ Fire Flow Testing by City of Eagle and Eagle Fire Department
    - ☐ Certification from project engineer that testing is correct and in compliance with City and State standards and regulation

Certificate of Completion

Project:_____

Development Owner:_____

Design Engineer:_____

All items in the following list are complete:

- ☐ Final Walk Over: _____
- ☐ Project Completion Checklist:_____
- ☐ Final Punch List: _____

The work to which this Certificate applies has been received by a representative of the City of Eagle, and Work is hereby declared to be complete in accordance with the requirements set forth by the City and the City Engineer:

_____
DATE OF COMPLETION

The City of Eagle recognizes this project as complete and all warranties shall start as of the above date of completion.

Certificates:

City of Eagle: _____ _____
Printed Name Signature Date

Developer/Owner: _____ _____
Printed Name Signature Date

Design Engineer: _____ _____
Printed Name Signature Date

City Engineer: _____ _____
Printed Name Signature Date

RESOLUTION NO. 08-09

A RESOLUTION OF THE CITY OF EAGLE, ADA COUNTY, IDAHO, SETTING THE STORAGE AND TRUNK LINE FEE (STL) PER EQUIVALENT RESIDENTIAL CUSTOMER (ERC), SETTING THE WATER CONSTRUCTION EQUIVALENCY FEE (WCE) AND SETTING THE HOOK-UP FEE TO BE APPLIED IN THE CITY OF EAGLE SERVICE AREA; PROVIDING A SCHEDULE FOR PAYMENT DUE AT PRELIMINARY PLAT AND FINAL PLAT; ESTABLISHING A STORAGE AND TRUNK LINE (STL) AND WATER CONSTRUCTION EQUIVALENCY (WCE) FEE CREDIT PROVISION; ESTABLISHING THE USES FOR FEE ACCOUNTS; SETTING EQUIVALENT RESIDENTIAL CUSTOMER (ERC) UNITS BASED ON METER SIZE; PROVIDING FOR RELATED MATTERS; AND PROVIDING AN EFFECTIVE DATE.

WHEREAS, the City of Eagle, Idaho ("City") is a municipal corporation operating under the laws of the State of Idaho and is authorized to fix rates and charges and take such other actions incidental to the management and operation of a municipal water system pursuant to Title 50, Chapter 10, Idaho Code; and

WHEREAS, development within the City increases the demand on the City's Water System requiring additional sources of supply, treatment, operation, maintenance, repair, replacement of and improvements to the City's Water System within the City of Eagle Water Service Area as set forth in the Master Plan which was amended in February 2005 and further updated in March, 2008; and

WHEREAS, the City periodically reviews the fee schedule to maintain reasonable fees to cover the costs associated with the increased demand on the City's Water System; and

WHEREAS, notice of the proposed increase in fees and imposition of new fees was published in the Valley Times, newspaper of general circulation within the City, June 23, 2008, and June 30, 2008, as required by law; and

WHEREAS, pursuant to a public hearing on the proposed fees held on July 8, 2008, as required by law, the City Council of the City of Eagle (the "Council") desires to set fees as set forth below.

NOW, THEREFORE BE IT RESOLVED BY THE EAGLE CITY COUNCIL, Ada County, Idaho, as follows:

Section 1: The following schedule outlines the Storage and Trunk Line Fee (STL), the Water Construction Equivalency Fee (WCE) and the Hook-up Fee as applied per Equivalent Residential Customer (ERC) in the City of Eagle's Water Service Area:

1. STL Fee per ERC..... **$2100.00**

2. WCE Fee per ERC paid at building permit issuance..... **$400.00**

3. Hook-up fee per ERC paid at building permit issuance..... **$850.00**

TOTAL **$3350.00**

Section 2: The following table provides for a scaled STL fee to be applied to applications for seventy (70) lot subdivisions or less, seventy (70) lot to five-hundred (500) lot

subdivisions, and subdivisions of five-hundred (500) lots or greater. A portion of the STL fee shall be paid at the time of application for preliminary plat approval and the remaining portion of the STL fee shall be paid at the time of application for final plat approval as follows:

Size of Application	Preliminary Plat Fee Per Lot or ERC	Final Plat Fee Per Lot or ERC
70 Lot Subdivision or less	$ 1,050	$ 1,050
71 to 500 Lot Subdivision	$1,135.47 +(-1.221 x Total Lots)	($ 2,100 minus Preliminary Plat Fee per Lot) x Lots in Final Plat
Greater than 500 Lot Preliminary Plat	25% of $ 2,100 x Total Lots	75% of $ 2,100 x Lots in Final Plat

Section 3: The Owner may provide for planning, development or construction of the public water system improvements identified in the Water Master Plan upon written approval of the City in lieu of the STL and WCE fee provided for herein. Upon written approval of the City, the STL and WCE fee may be credited/reimbursed as follows:

1. All eligible costs must be approved in writing by the City before the costs are incurred.

2. Eligible costs may include costs incurred for improvements having system-wide application as defined in the Water System Master Plan including water right transfer, appropriation, well permits, well development and construction, trunk line construction, pressure reducing/boosting stations, and storage reservoir design and construction.

Section 4: STL and WCE fees shall be tracked as individual accounts and shall be used in the following manner:

1. Eligible costs for water supply related expenses including well permitting, design and construction of wells, buildings, treatment, and appurtenances shall be credited/reimbursed from the WCE account.

2. Eligible costs for water storage, distribution system improvements, pressure regulation and control expenses shall be credited/reimbursed from the STL account.

3. Costs that shall be ineligible for credit/reimbursement shall include but not be limited to costs related to: (a) distribution system (8-inch diameter or less) design and approval, (b) construction of distribution or service extensions within the development, (c) defending against appeals, protests, or other legal challenges, (d) design and construction modifications required by the Idaho State Department of Environmental Quality, (e) contractors hired directly by the Owner unless the project was publicly bid from documents reviewed and approved by the City.

4. The determination as to whether eligible costs are allocated as a credit or a reimbursement shall be made by the City, at its sole discretion.

Section 5: Calculation of Equivalent Residential Customer (ERC) units shall be based on installed meter size based on the following table:

Meter Size (inch)	**ERC's**
5/8	1.00
5/8 x ¾	1.00
¾	1.00
1	1.78
1-1/2	4.00
2	7.11
3	16.00
4	28.44

ERC's for meters greater than 4-inch shall be calculated on an individual basis. Where commercial or industrial buildings with office or retail are planned but meter size has not been determined, the ERC fee shall be calculated on the basis of 21.74 ERCs per 100,000 square feet of gross area.

Section 6: Existing City rates and fees that are not in conflict with the rates and fees adopted by this Resolution shall remain in full force and effect.

Section 7: This Resolution shall take effect immediately upon its passage and approval.

DATED this 8th day of July, 2008.

CITY OF EAGLE, IDAHO

Phil Bandy, Mayor

ATTEST:

Sharon K. Bergmann, City Clerk

CITY OF EAGLE CORPORATE SEAL INCORPORATED 1971 STATE OF IDAHO